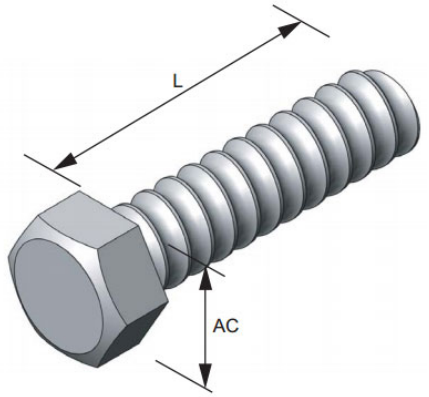

50A350CBH0P

OCM Coil Bolts are made from high strength steel, and are used with different types of coil thread nuts and inserts in concrete formwork, bridge deck forming, or precast concrete applications.

Part Number	50A350CBH0P
Safe Working Load (lbs)	4,125
D Size (in)	1/2"
AC Across Flats (in)	3/4"
L Length (in)	3-1/2"
Weight Per 100 Pieces (lbs)	19.4
Carton Quantity	250