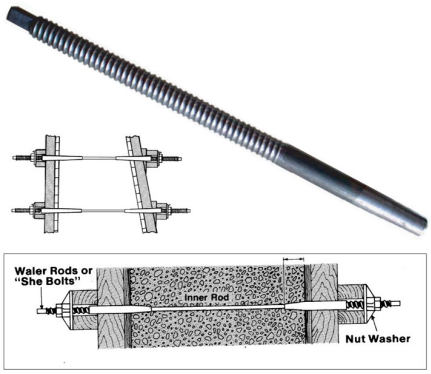

SB7550-24P

OCM Inc. She-Bolts are heavy duty, reusable form ties for medium and heavy concrete construction. They are used with Inside Rods or Coil Rod that can be cut in the field to any desired length based on form thickness that is required. She-Bolts are meant to be reused, but they do wear so they must be continually inspected. When wear or damage is noted, they must be replaced. A water-proof grease should be applied to the embedded portion of the she-bolt to facilitate removal.

Part Number	SB7550-24P
Safe Working Load (lbs)	9,000
Length (in)	24"
Ext. Thread Dia. (in)	3/4"
She Bolt External Thread Type	Coil
Inside Tie Rod Thread Dia. (in)	1/2"
Inside Tie Rod Thread Type	Coil