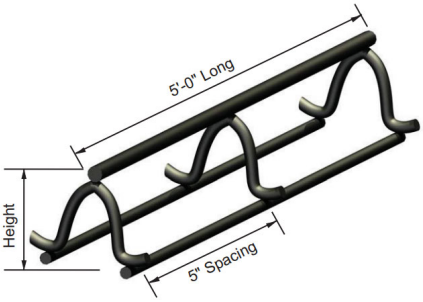

SBU125-P

OCM Slab Bolster Upper - Plain metal bar supports are used in commercial concrete projects to support reinforcing steel in elevated concrete decks, footings, slab on metal deck, bridge decks and other applications.

Part Number	SBU125-P
Weight Per Piece (lbs)	0.4
Height (in)	1-1/4"
Bundle Quantity (lf)	100